NCT®
CONTROL DRIVES MOTORS
KEEP MOVING

NCT 200 TOUCH
SMART CNC FAMILY

NCT 201
NCT 204

NCT 204

Rapid advancement of computer hardware and operating systems enabled us to create the control NCT 204, the most recent member of the control family NCT200.

We created a new type in which we, without any compromise, successfully integrated the latest WINDOWS operating system for the user interface and applications (APPs) in such a way that we could retain well-tried simple hardware configuration of the NCT 201.

The key to this is application of the latest **ITX** standard 4-core hardware and the brilliant real-time **INtime** operating system manufactured by the TenAsys company and that can be installed for **WINDOWS**.

In case of the NCT 201, besides the so-called CNC core performing motion of axes and actuation of PLC, the human-machine interface also runs on a single-processor (single-core) computer with WCE6 operating system.

In the NCT 204 control there is only one computer too behind the monitor performing CNC and user interface (HMI) tasks, but in this sole computer 4 processors (4 cores) thump. On two cores the NCT user interface (HMI) installed for well-known WINDOWS operating system and wide range of applications run, while the CNC system runs on the other two cores.

With this control, our most advanced CNC programming software, the renewed myNCT and the VECTOR, and solid state displaying integrated in NCT HMI can be used already. We built up the system and made it open in such a manner that either the NCT company or the machine tool builder himself can replace or develop further the user interface in accordance with his own demands or his given machine.

This development opened a totally new market for the NCT company. Through it, we became able to design custom-tailored, own and special user interface for machine tool builders. Thus we can reach those OEM partners who want to enter their market with CNC user and programmer interfaces of their own design.

The control NCT 204 is applicable advantageously to execute any control tasks on machine tools from the simplest lathe up to the complex multi-channel and multi-axis machining cells.

The special user and programmer interfaces, the high-performance PLC running in the background, the multi-channel motion control and the wide selection of peripheral devices make the NCT 204 also applicable to carry out complex control and industrial automation tasks. Although, because of the lower-performance hardware and operating system, our new services cannot be installed on the control NCT 201, it is a good news for the clients having NCT 201 **that from September 2016 it is possible to replace the control NCT 201 with the newest control NCT 204 at a reasonable price.**

Sameness/difference - NCT 201/NCT 204	NCT 201	NCT 204
CNC hardware	1 processor core	4 processor core
CNC operating system	WCE6	INtime
Operating system fo the user interface	WCE6	WINDOWS 10 embedded
Multi-channel	Optional	Optional
Third-degree acceleration	Optional	Optional
Nanosmooth	-	Optional
3+2D	Optional	Optional
TCP (5D)	-	Optional
CPC (5D)	-	In preparation
myNCT	Optional	Optional
Displaying solid state	-	Optional
Graphical DIALOG programming VECTORCAM	-	Optional
Collision monitoring	-	In preparation
Intelligent measuring machine functions inside the working space	-	In preparation
Custom-tailored special user interface	-	Optional

NCT 204 with the behind-the-display CPU and a wide selection of control panels

Third-degree acceleration/ deceleration

With the development of a new speed calculation mathematical model, it became possible to incorporate third-degree acceleration/deceleration into NCT controls. Owing to this function, dynamics of our machine can be further increased without overloading mechanical parts.

This service is especially significant during high-speed machining in the area of tool manufacturing, in high-speed lathes or in the so-called tapping centres. As regards tool manufacturing, the machining time does not depend on the maximum velocity of the slides, but it depends on dynamics of the machine. The new mathematical model extracts all the goodness of drive systems and mechanics.

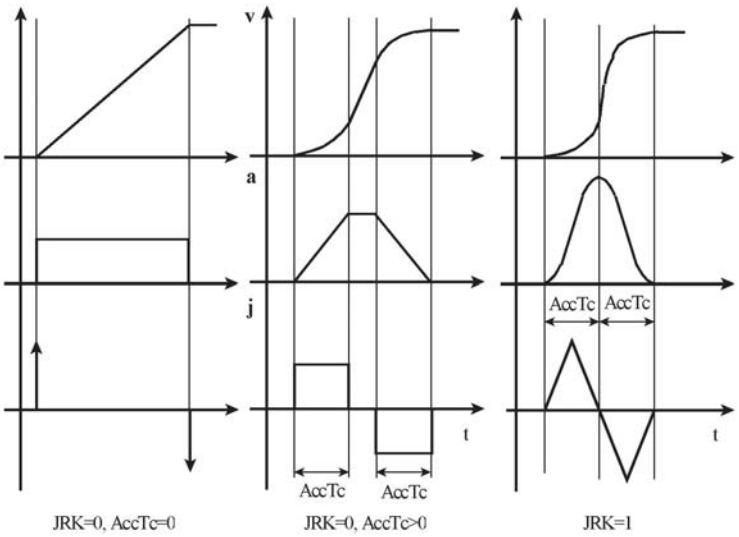

From left to right the drawings illustrate the development, as they display the acceleration of NCT 90, NCT 100 and NCT 200. In the bottom row it is clearly shown, that in the case of the NCT 200 control the jerk (acceleration change) does not jump and the axis acceleration takes the least amount of time and distance

Power management

The increasing price of electricity and environmental concerns demand a very strict power management from all of us.

The NCT constantly monitors the electric network of the machine tool, the sequence of phases, monitors and logs the consumption and the network errors. To these, the machine tool builder can react through PLC (e.g.: in case of power failure he can stop the machine in time or he can limit number of electric equipment in case of energy consumption peak).

Consumption during a selected time period within the logged interval (even in case of one workpiece) can be displayed in a table or graphically and even in the set currency unit. In serial production the price of electric energy can be managed in an economical way. More dynamic machining or lower energy price – the opportunities that can be chosen.

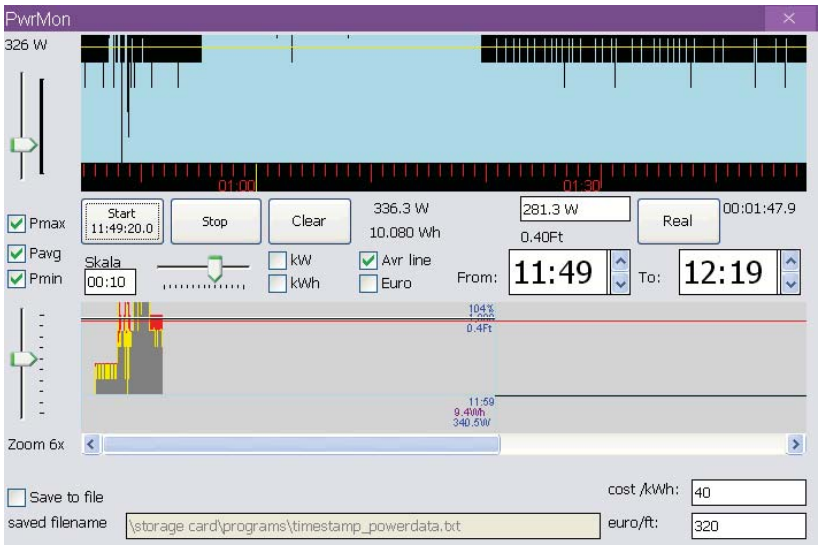

The VD-510 high-speed machining centre is able to produce 1.2 G acceleration due to the new mathematical model.
Its high dynamics and high speed make the VD-510 ideal for electrode manufacturing, but it is also favoured by parts manufacturers.

Renewed user interface

Clear-cut, elegant screen images
Enlarged display surface
Enhanced operating techniques
Simplicity, and versatility
Functions supporting the programming – myNCT

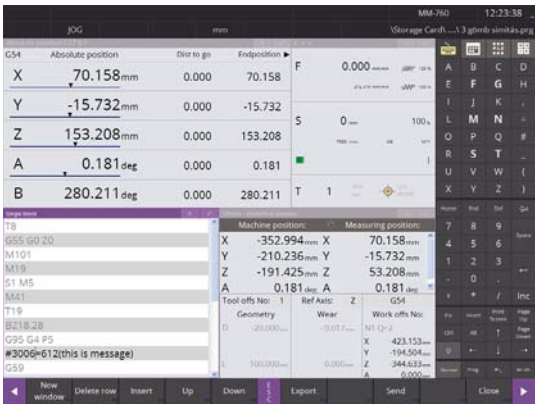

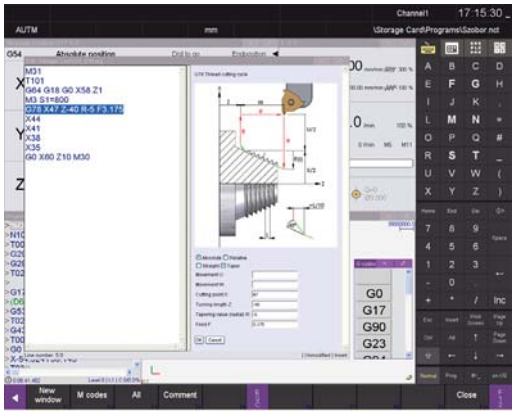

Displaying solid state

We redeemed an old debt towards our users by incorporating the displaying of solid state. Since the input of this graphical representation is command data issued to the servo drives, therefore the image of the workpiece on the high-resolution display of the NCT controls, perfectly renders how the workpiece will look after processing. Using the latest software, even the model of the pre-product can be represented. The machining is drawn on the pre-product, so the user can directly see the result of machining. Where the two drawings encounters, the colour of the lines changes, emphasizing unwanted machining.

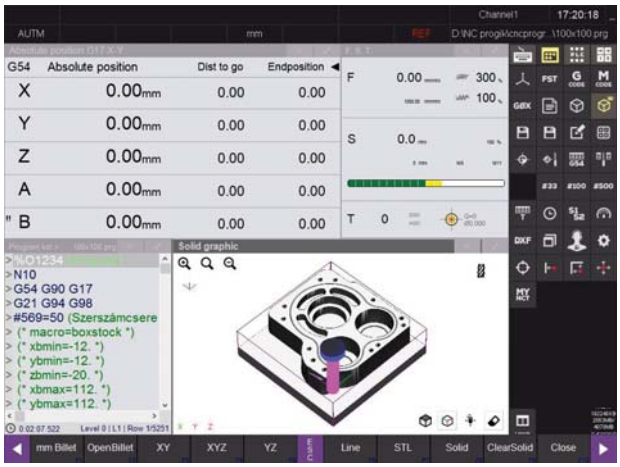

3+2D, 5D, TCP, CPC

With our previously developed **MULTICHANNEL** capabilities we were able to reach the market of the most complex lathes and manufacturing cells.
With our 5D capabilities we became able to control the most complex types of machining centres. The opportunity presented itself to provide our controls for machines used in wood industry, stone machining and laser cutting and for the most expensive machines of metal industry.

In the world market, only a few CNC manufacturers are able to offer both of these services at once!

TCP is the first step of the 5D machining. In such a case, the tip of the tool is controlled on the surface of the workpiece. The linear and the rotating axes move together so that the tool travels on the surface of the workpiece at the programmed speed.
CPC is the next stage of the 5D. In this case, not a well-defined point of the tool is controlled on the surface, but its cutting point varying continuously.

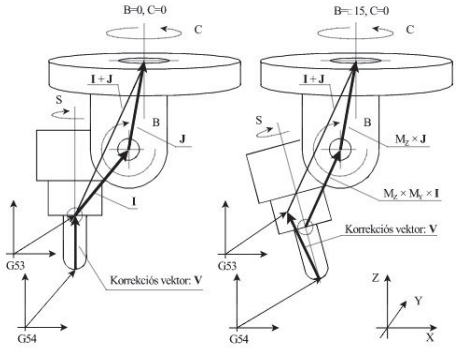

Tool direction length offset
G43.1

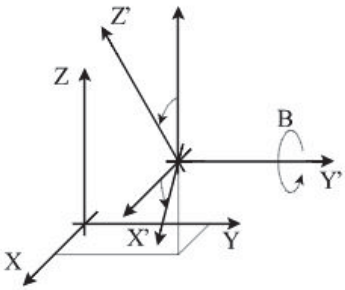

3D coordinate transformation
G68.1, G68.2

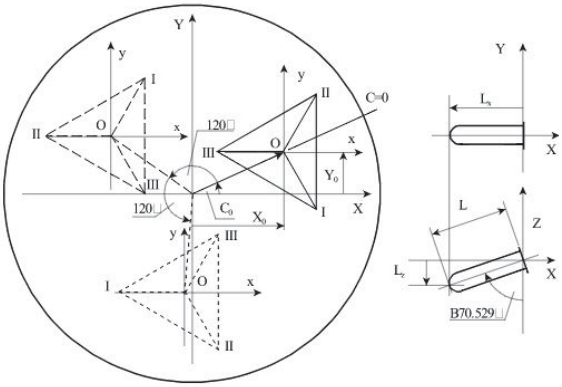

Dynamic zero-point management
G54.2

Machine monitoring

The NCT control records every operator, PLC, CNC event in a so called log file. From the log data of a selected interval the most important operation modes (MACHINING, SETTING, STANDSTILL, ERROR STATUS) are filtered and represented graphically. From the diagrams, degree of the utilization of the machine can be readout, and retrospectively (going back months) the amount and reasons for standstill times of the machine can be displayed.
The log file data are very helpful to find the reason of machine tool failure. For precise and fast service or for preparation for repair, please forward log file data to the NCT centre!

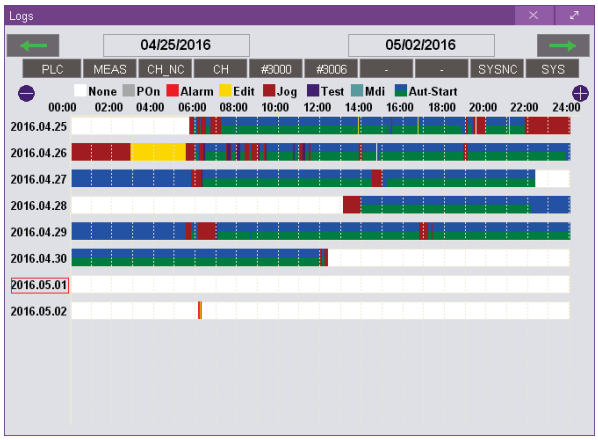

Remote diagnostics

Our remote diagnostics service provides simple, fast, economic error detection and trouble shooting, if the user allows us to connect to the NCT control via Internet. Through remote diagnostics, our NCT expert is able to gain access from home to nearly all of the functions he could access standing next to the machine. There is no call-out fee and what is the most important, the expensive waiting time can be avoided! The use of the remote diagnostics service extends warranty time and for users the service is absolutely free.

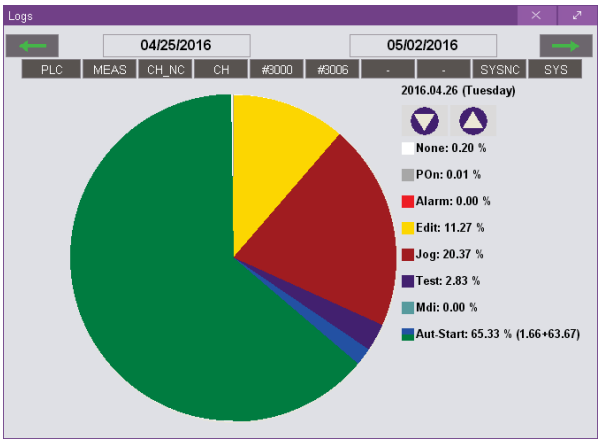

Measurement, digitalizing, Misalignment correction

Measurement

There are ready to use cycles in NCT controls for basic cases like corner point, hole, pin measurement, and calculations for checking the workpiece geometry (measuring length, circularity, angle).

Misalignment correction

Our misalignment correction is probably the service that shows best of all, how mathematics can aid the life of machine operators. The workpiece does not have to be accurately positioned by the operator! After measuring the position of the workpiece, the control performs the machining in the coordinate system of the workpiece, while the operator can follow the programmed motions on the screen.

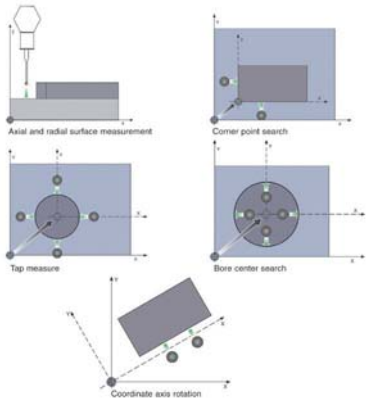

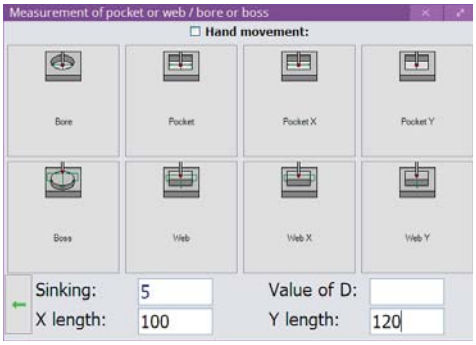

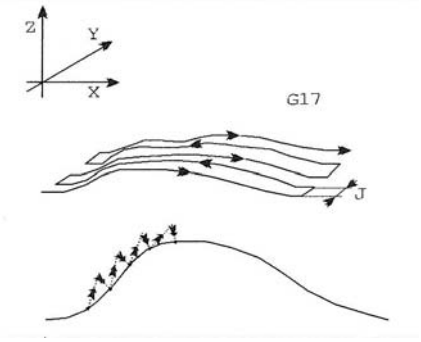

VECTORCAM programming integrated in NCT control
It is child's play to program and simulate in this exceedingly user friendly CNC programming system.
Not a CADCAM software!
Knowledge of high-level computing techniques is not required to use the software!
This is a real INDUSTRIAL SOFTWARE created for machine operators and programmers!
With a machine tool it can be used from the simplest outline drawing to the 3D simulation.

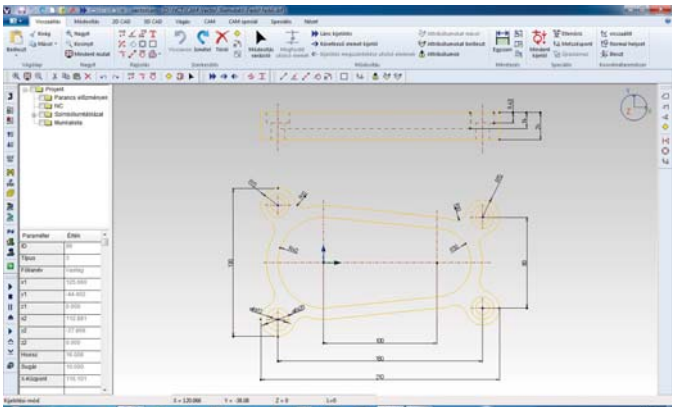

Based on the technical drawing, it is extremely easy to input the workpiece contour using the editing screen.

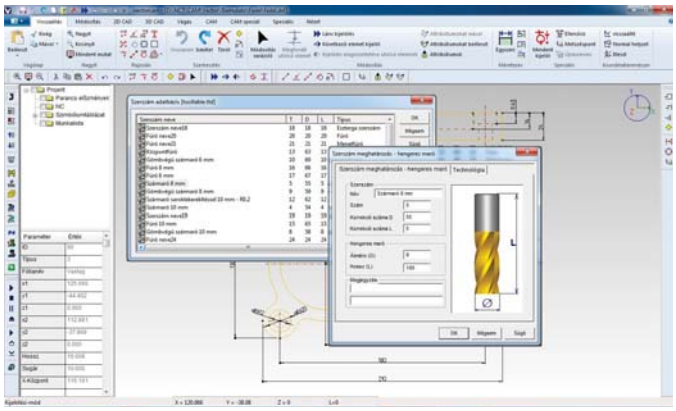

The tooling can be selected from the tool catalogue.
Together with the tools the technological parameters are automatically loaded in.
The tool library can be enlarged by the user.

Simple and fast CNC programming without G codes
With a few lines the contours of machining can be drawn, and then only the tooling, the automatically offered technology, and the machining strategy have to be selected to start the 3D simulation of the processing. After the process the model of the solid state appears, that can be enlarged, reduced or rotated. The cutting can start after accepting the virtual workpiece.

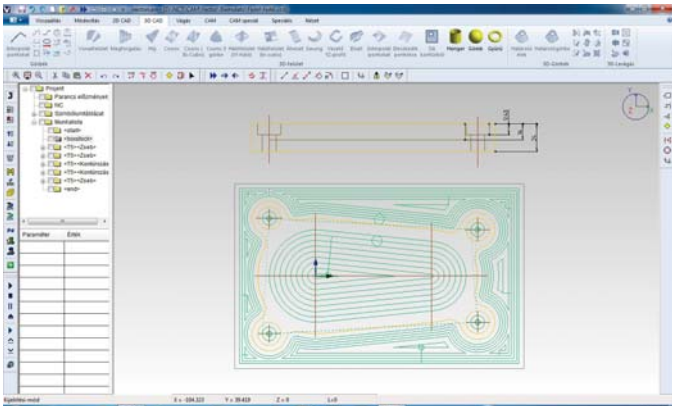

According to the selected machining strategy the tool path can be displayed.

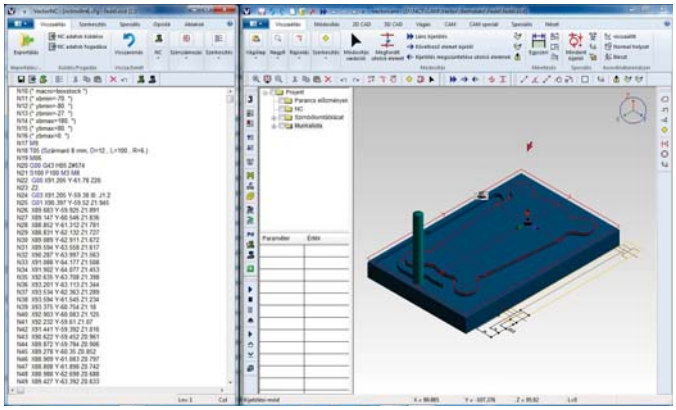

Technological program can be seen at the left side of the screen when the solid state is displayed.

Programming mill and lathe

Milling

- Drilling on point pattern, intelligent hole design
- Contour milling
- Face milling
- Pocket milling with islands
- Engraving WINDOWS fonts on optional surfaces
- Removal of remnant
- Outer/inner thread milling
- Helical hole milling
- Wide variety of contour approach and depart motions
- Deburring and chamfering
- Profile shaping
- Tool library and selection of technology

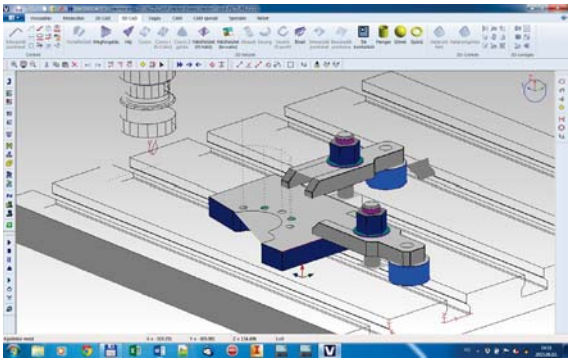

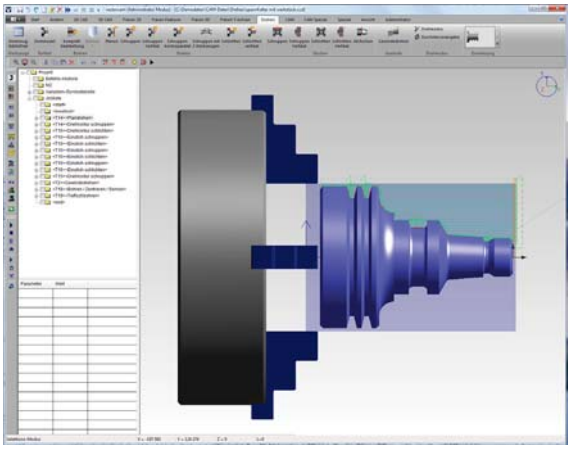

Turning

- Roughing strategies
- Finishing processes
- Thread cutting
- Drilling and boring
- C axis machining
- Tool library and selection of technology
- Deburring, chamfering
- Profile shaping

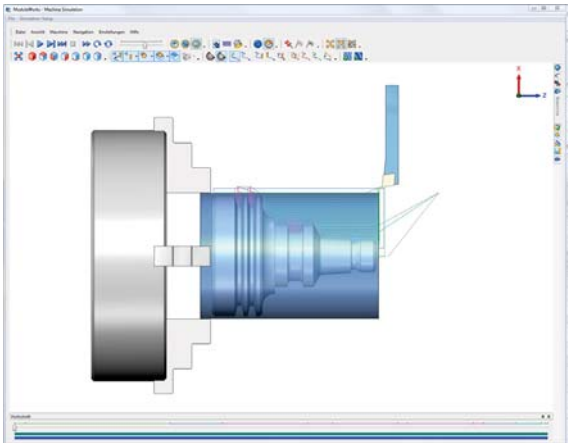

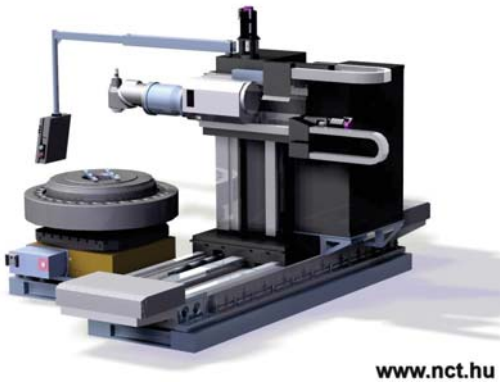

Models of MFMC-3000 machining centre and EUROturn-12C lathe machine with sub spindle. Due to the models and the soon-to-be-finished dynamic interference monitoring, it will be possible to avoid accidental collision in NCT machines.

Compact mechanical design
Space-saving, easy-to-assemble and economical design, as the drive boxes can be placed directly next to each other and distance between units is not required.

Out-of-the-cabinet cooling
It is easy to arrange in or out-of-the-cabinet variant moving the retaining tongue.
More intensive cooling – More power output
Separated electronics – Minimal dirt, longer lifetime, and no maintenance required
Temperature-dependant fan control - Economical power management, no undercooling, longer lifetime
Heat production outside the cabinet - No heating up the electric cabinet, economic power management

Modular architecture

Measuring system inputs:
TTL – Mostly for retrofit purposes
SINUS – High-speed incremental channel
HEIDENHAIN EnDat22 – High-resolution absolute position measurement
The EnDat 22 is the basic measuring system of NCT servo motors

Command input:
+/- 10 V analogue input – Mostly to replace older drives (under development)
CAN BUS connection - Mostly to replace older NCT drives (under development)
CoE (CanOpen over EtherCAT) - The most widely used, EtherCAT based communication protocol. It enables products of different drive manufacturers to be connected to NCT control.
SoE (Sercos over EtherCAT) – The most advanced, and high-speed, ETHERNET-based digital interface.
The NCT servo drives play key role in NCT remote diagnostics service too. The SoE communication enables remote inspection down to the level of motor and encoder on it.

LVDS
In order to decrease costs and wiring, the EtherCAT connection with NCT control can also be resolved in such a way, that the industrial ETHERNET connection (RJ45) is only configured on the power supply unit, and the drives are connected via flat cable in the LVDS channel.

Covered buses
The built-in pair of buses in the front panel ensures the high voltage power supply for the drive modules. After simple removal of the contact protecting plastic front panel, any unit of the drive row can be removed by tilting the bus parts without dissembling them.

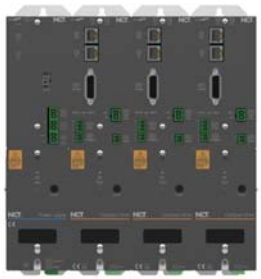

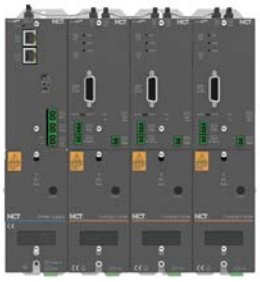

In the left side picture every drive unit has RJ45 connection. In the picture in the middle the RJ45 connection is built into the power supply, the drives are connected to each other via the LVDS bus on the top of the boxes. Int he right side picture the covered buses are illustrated.

GROUP	ITEM	S/O	DESCRIPTION
HARDWARE	1,8 GHz ATOM CPU (201) 1,93 GHz 4 core (204)	S	High speed by minimal heat production Control panel does not require external cooling
	16 GB memory (201) 120 GB SSD (204)	S	Running CAD/CAM files do not require external computer Semiconductor HDD Without moving parts, only a single Compact Flash
	4 pcs of USB	S	100% PC compatibility Any PC keyboard can be used Any PC screen can be used
	Ethernet	S	Connect to office computer network Standard TCP/IP protocol
	Graphic touchscreen	S	19" or 15" size Touchscreen - default screen Default programming keyboard in screen Lifetime of touchscreen is 10 million presses (anywhere) Long lifetime, interchangeable protecting foil
	Machine control panel	S	ALPS pushbuttons Lifetime is 10 million clicks IP 54 protection Each button have LED light Modes, conditions, moving (JOG), start/stop buttons, speed and spindle range shifting switches 1 pc key switch Place for built-in handwheel 20 buttons for general purpose in 19" model 8 buttons for general purpose in 15" model
	Feedrate override	S	Magnetic arrestment Without mechanical arresting unit - long lifetime Absolute position measurement by magnetic indexing 31 ranges
	Handwheel mounted in control panel	O	Magnetic arrestment Without mechanical arresting unit - long lifetime Rotation measurement by magnetic indexing
	External, portable handwheel	O	Separated handwheel possible per axes Modes, moving and starting buttons, feedrate override Magnetic arrestment Without mechanical arresting unit - long lifetime Rotation measurement by magnetic indexing
	EtherCAT communication with peripheries	S	IO peripheries and servo drives can be connected to one Ethernet network Easy, inexpensive wiring Compatibility - using products of another manufacturer
	EtherCAT peripheries	O	Wide rage of variety Manufacture specific solutions by respected user demands
BASIC CNC	Windows Embedded operation system (201)	S	Windows file management Using standard WINDOWS peripheries
	Open Windows professional platform	O	NCT 204 Any application can be run beside of NCT HMI (user interface) CAD/CAM application (VECTOR, EdgeCAM)
	Intelligent software protection	S	ESIC - electronic protection card (EtherCAT Software Integrity Card) Protecting options Dynamic memory management without data loss PAYBIT EtherCAT junction (external handwheel)
	Softwares downloaded from Internet	S	CNC system program Servo drive system program Servo parameters Ready, tested PLC programs for different machine tools Application shop (NCT 204)
	Workpiece time calculation	S	Workpiece time calculation (real time) Take into account tool change time and other secondary times Also works in test run Graphic display

GROUP	ITEM	S/O	DESCRIPTION
	Cycle intervals	S	125 us speed control 1 ms path compute 1 ms record processing 1 ms position control 10 ms PLC base 1 ms PLC quick module
AXES	Axis max. number	O	Max. 8 channel Max. 32 axes Max. 16 axes per channels Max. 16 spindles Selectable main spindle for cutting, thread cutting, tapping per channels
	Standard axis number	S	Lathe: 2 axes + 1 spindle Milling machine: 3 axes + 1 spindle or 4 axes
	PLC axes	O	Moving axes from PLC program
	PLC axes number	O	Not limited, any axis can be defined as PLC axis
	Reference signal output	S	EtherCAT
	Reference signal output IO train	O	Analogue CAN BUS Pulse forward/backward Pulse + direction
	Generate TACHO signal	O	Issue proportional analogue tacho signal to measuring system signal frequency in motor shaft Issue command signal in one analogue line (reference signal - speed)
	Position feedback by servo drive	O	EtherCAT TTL I Vpp (voltage sinusoidal) II uApp (current sinusoidal)
	Position feedback by IO train	O	EnDat 2.2 (HEIDENHAIN linear scale) TTL (retrofit) I Vpp (voltage sinusoidal) II uApp (current sinusoidal)
	Taking reference point by NCT servo drive	S	Absolute EnDat 2.2
	Taking reference point by IO train	O	Absolute EnDat 2.2 C type (HEIDENHAIN linear scale, angle gauge) Reference pulse Switch
	Compensations	S	Backlash error Thread pitch error Backlash acceleration Stick slip Straightness
SPINDLES	Spindle max. number	O	Max. 16 spindles Max. 16 spindles per channel
	Simultaneous running	O	Several spindles running simultaneously
	Electronic interlock between spindles	O	Electronic interlock between spindles Ratio set by parameter Gear cutting functions Polygon turning
	Rigid tapping	O	Different acceleration for drilling and retracting set by parameter
	Orienting	S	To zero pulse of encoder To switch
MORE CHANNELS	Number of channels	O	Max. 8
	Represent channels	O	User can create its own screen
	Relation between channels	O	Wait from technological program PLC
	Special axis management	O	Synchronous control Superimposed control Mixed control

GROUP	ITEM	S/O	DESCRIPTION
INTERPOLATION	Linear	S	Positioning Feed
	Circular	S	Along several quadrants
	Variable radius circle	S	Spiral of Archimedes
	Complex	S	Circular along 2 axes + linear along max. 14 axes
	Special	S	Polar coordinate Cylinder
	Tapping	S	Uniform pitch Through several records Different pitch
	Finishing (SMOOTH)	S	Laying third degree Bezier spindle curve
FEED RAPID TRAVERSE	Feed	S	Per minute Per revolution
	Feedrate override	S	Operated from PLC
	Acceleration/deceleration	S	Linear Quadratic
	Feed control functions	S	Continuous cutting mode Exact stop mode Corner override mode Tapping mode
	Feed automatic decrease	S	Internal machining of circle in G41, G42 state in the ratio of programmed and corrected radius Machining of circle in function of circle radius and permitted acceleration/deceleration Machining corners, in function of speed deviation set by parameter
HSHP High-speed and high-precision tracking	Nanointerpolation	S	Path computing, compensations in nanometer resolution Increased surface quality
	Acceleration/deceleration	S	Quadratic speed change Acceleration/deceleration without knocking
	Multibuffer mode	S	Read forward 1 000 blocks Switch on Switch off
	Feed forward	S	Tracking by decreased lag
	Point eliminator	S	Smoothing path generated by external device
	SMOOTH	S	Smoothing interpolation Bezier spline
	Number of workpiece coordinate systems	S	6 + 99
COORDINATE SYSTEMS AND TRANSFORMATI-ONS	Transformations	S	Rotating Mirroring Scaling
	Select plane	S	X-Y X-Z Y-Z
	PLC integrated in CNC	S	Quick, economic
	Max. number of IO lines	O	512 INPUT 512 OUTPUT

GROUP	ITEM	S/O	DESCRIPTION
PLC	IO modules	O	16, 32 line inputs 16 line semiconductor outputs 8 line relay output Analogue input/output units (+/-10V, 4-20 mA) Linear scale connection Touch probe connection Pulse issue forward/backward Pulse issue (A, AN, B, BN) Pulse issue pulse/direction
	Ladder programming	S	Well-known programming language appropriate for international requirements Easy error detection
	Ladder display	S	Real time display of PLC processes in CNC Green flow
	Testing PLC	S	Logic analyzer Current flow display
MACHINE INSPECTION	Remote diagnostics	S	Connect to remote computer
	Logbook	S	The inspection module of software inspects and saves everything Graphic display
	Temperature diagnostics	O	Increased accuracy by compensating head deformations Measuring temperature in 8 points
	Vibration diagnostics	O	Increased safety Machine inspection
SOFTWARES TO HELP TECHNOLOGICAL PROGRAMMING	myNCT	O	Easy, effective programming Most effective solution for programming in machine tool
	ASSIST	S	Interactive screen for help programming Interactive screen for help operating
	Running CAD/CAM program in CNC	O	NCT 204 Windows 7 platform VECTOR, EdgeCAM
FUNCTIONS TO HELP TECHNOLOGICAL PROGRAMMING	Cycles	S	Drilling cycles Simple turning cycles Complex cycles (turning roughing, facing roughing, grooving, thread cutting, etc.)
	User-specified cycles	O	Cycles written in MACRO programming language
	Define chamfer	S	,C
	Define fillet	S	,R
	Intersection point computing	S	Line - line Line - circle Circle - line Circle - circle
MANAGE PROGRAM	Subroutine technique	S	4 calling levels
	Conditional block skip	S	Max. 9 switches
	Macro programming	S	Effective solution for programming user cycles
EXECUTE PROGRAM	AUTOMATIC	S	Assign selected program file to run
	MDI	S	Execute new program when interrupt AUTOMATIC execution
	Handwheel	S	Program execution controlled by handwheel
SERVO DRIVE TECHNICS	EnDat 2.2 rotary encoder	S	Standard measuring system of Ai series NCT servomotors 33 million position/revolution Absolute measuring system through 4096 revolutions
	EnDat 2.2 linear scale	O	Absolute measurement 50 nanometer resolution

GROUP	ITEM	S/O	DESCRIPTION
SERVO DRIVE TECHNICS	SoE protocol	S	Sercos over EtherCAT
	CoE protocol	S	Can Open over EtherCAT
	Servo drive parameter setting	S	From CNC without using external unit Loading ready, tested parameters from directory Generate servo drive parameters of asynchronous servomotors using original parameters of motor (data table)
	Refreshing system program	S	From CNC without using external unit
	Servo drive setting	S	Autotuning Oscilloscope Circular test
	Tandem mode	O	Tandem mode of synchronous servo drives Tandem mode of asynchronous servo drives
	Power supply	O	Recuperation careful with mains
	Connection to other servo drives	O	By standard protocol (SoE, CoE) Analogue +/-10 V Pulse issue forward/backward Pulse issue (A, AN, B, BN) Pulse issue pulse/direction
SERVOMOTORS	A series	O	Ferrite magnet
	Ai series	O	Neodymium magnet
	AiS asynchronous motors	O	Liquid cooling Bearing cooling Temperature measurement in several points 10000, 12000, 15000 speed
	AMS power spindles	O	Liquid cooling A2-5, A2-6, A2-8 spindle nose Temperature measurement in several points
	TORQUE motors	O	High intensity liquid cooling Tilting milling head Rotary table, indexing table
DIAGNOSTICS	Oscilloscope	S	Display characteristics of servo drive features
	Logic analyzer	S	Display PLC outputs/inputs in time diagram
	Circular test	S	Graphic display of synchronous running servo drive axes Check dynamics of servo drives Does not require external unit Display mechanical errors in machine equipped with linear scale
	Simbolic IO	S	Dispay PLC variables in optional order
	IO test	S	Display PLC outputs/inputs in chart
	Measuring system test	S	Display servo drive features in chart
ENVIRONMEN-TAL AWARENESS	Recuperation braking	S	In case of recuperation, if capacitor has filled than energy flows into mains from motor in generator running. Since machine tools have connected in common mains with another consumers, they receive the generated energy so electricity meter ro-tates slower.
	High capacity capacitor	S	Motor will be in generator running in braking, so energy flows to the servo drive, at first, it fills the capacitor
	Electronic gearbox	O	The electronic gearbox is cheaper than the mechanical construction and it has lower current drain than a high power motor without gearbox. The users are always short of power and improving mains is very expensive. Further-more it requires smaller transistors, less capacitors, so the electronics is also cheaper.
	Transferring heat out from electric cabinet produced by servo drives	S	Servo drives produce the most heat inside the electric cabinet. If this heat is transferred out from electric cabinet so it does not stoke the electric cabinet than it does not require energy for cooling electronics.

GROUP	ITEM	S/O	DESCRIPTION
ENVIRONMEN-TAL AWARENESS	Switching fans	O	Measure temperature of electric cabinet and cooling ribs and stop fans if possible No undercooling
	Decreased motor inertia	S	Less inertia = lower power requirement= lower loss
	Modern power switches	S	Minimal loss Minimal heat production
	Thin grease lubrication	O	Does not pollute coolant water Does not pollute environment
INTERPRETED G CODES	Data determination	S	G20/G21, G90
	Incremental programming	S	G91 Also with operator I
	Workspace limitation on/off	S	G22/G23
	Interpolations	S	G0, G1, G2, G3 G12.1/G13.1 G7.1 [axis address] G7.1 [axis address]0 G33, G34 G5.1 Q2 G28, G30, G31 Qn, G37, G36 G84.2, G84.3 G50.2/G51.2 G4
	Spindle oscillation inspection off/on	S	G25/G26
	Feeds and its control functions	S	G94, G95, G96, G97 G9, G61, G62, G63, G64
	Control functions of high-speed machining	S	G5.1 (P0, P1, Q1, Q0, R1, R2, R3)
	Workpiece coordinate systems	S	G54, G55, G56, G58, G59, G54.1 P1-99
	Coordinate systems, transformations	S	G52, G53, G92 G17, G18, G19, G50, G50.1, G51, G51.1, G68, G69
	Tool corrections	S	G36, G37, G40, G41, G42, G43, G44, G49
	Drilling cycles	S	G73, G74, G76, G80, G81, G82, G83, G84, G84.2, G84.3, G85, G86, G87, G88, G89, G98, G99
	Turning cycles	S	G70, G71, G72, G73, G74, G75, G76, G77, G78, G79
	Macro calling	S	G65, G66, G66.1, G67
MACRO PROGRAMMING	Variables	S	Symbolic Local until 4 levels: # 1 -#33 Common: #100-#499, #500-#999
	Definition	S	#i=<formula>
	Arithmetical	S	+, -, *, /, MOD
	Logical	S	NOT, OR, XOR, AND
	Other	S	ABS, BCD, FIX, FUP
	Functions	S	SQRT, SIN, COS, TAN, ASIN, ACOS, ATAN, EXP, LN
	Conditional expressions	S	EQ, NE, GT, LT, GE, LE
	Junction	S	GOTO(block number) IF[<conditional expression>] GOTO(block number)
	Cycle management		WHILE[<conditional expression>] DOm...ENDm
	Data issue	S	POPEN, PCLOS, DPRNT, BPRNT, FOPON, FCLOS

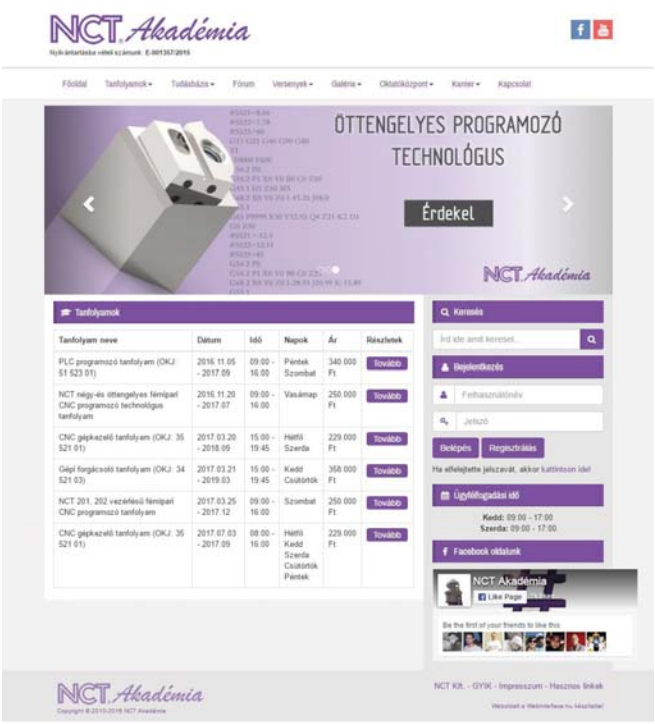

The homepage of NCT ACADEMY
Wide range of trainings

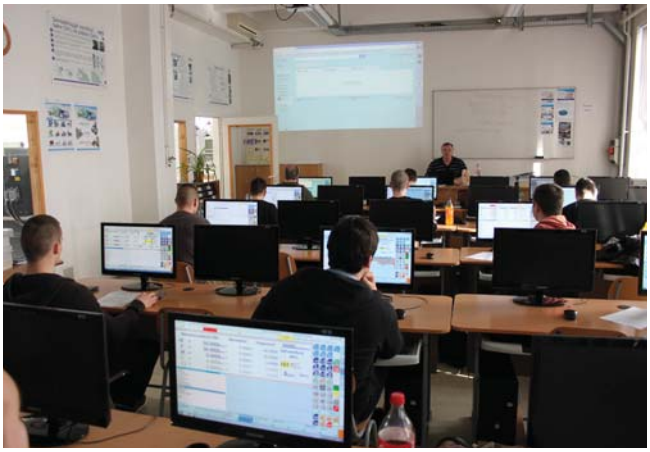

Theoretical and practical studies

PLC programming lesson at the NCT Machine tool factory in Taksony for the International class

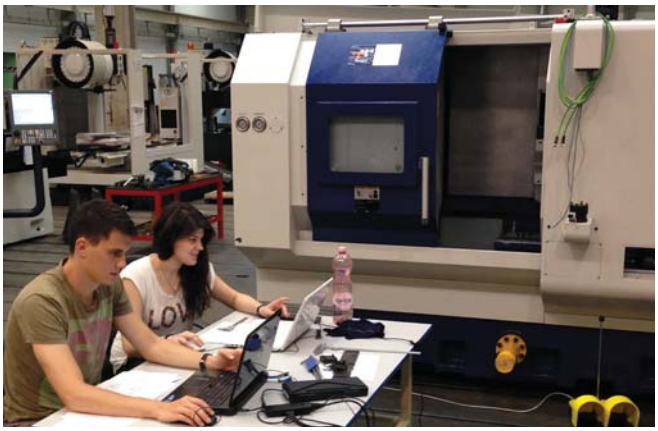

Summer courses at NCT Machine tool factory in Taksony

Distributors

BEAR Werkzeugmaschinen GmbH
Germany
Chausseestr.1A. D19322, Weisen
T: +49 (0) 172 311 86 56
F: +49 (0) 3877 9576848
bearwmaschinen@yahoo.de
www.bearw.de

Industriebedarf Krüger GmbH
Germany
Pudelhofsweg 3. D27386 Brockel
T: +49 (0) 4266 – 94105
F: +49 (0) 4266 – 94106
khk@khk-brockel.de
www.khk-brockel.de

Simultan Arad S.r.l.
Romania
Bucaresti
Str. Piscul Crasani Nr.10 Sector 6.
T : +40 722 668035
F : +40 21 434 3861
simultan@clicknet.ro

SLOVTOS spol.sr.o
Slovakia
Jasová 94134,
Pri Novych Zámkoch
T: +421 905 425 075
T: +421 910 925 075
F: +421 35 6477 103
pilcz@slovtos.sk
www.slovtos.sk

HUNOR d.o.o.
Croatia
Zagreb Radnička cesta 198.
T : +385 1 7987 207
F : +385 1 7987-208
info@hunor.hr
www.hunor.hr

MALEKS
Ucraine
Promyshlennaya str. 37/4.
65005, Odessa, box 98
T :+38 048 738-0735
T :+38 048 738-0736
F : +38 048 738-5162
maleks@eurocom.od.ua
www.maleks.odessa.ua

JSC "STANKOTECH"
Russia
Moscow 127055
Vadkowsky side-street, 18A, bld.1
T : +7 (495) 643 61 67
F : +7 (499) 978 48-55
info@stanko-nct.ru
www.stanko-nct.ru

ELEKTRONIS
Poland
65-139 Zielona Góra
ul.Jemiołowa 8
T: +48 68 411 13 99
F: +48 68 422 70 14
info@elektronis.pl
www.elektronis.pl

Marathon Machine Tools
USA
5515B-FM 1960 RD. East
Humble, TX. 77346
T: +1- 281-812-2324
F:+ 1-281-812-4160
georged@marathon-excel.com
www. marathon-excel.com

CNC AUTOMATIKA
Latvia
Ganibu Dambis 26, LV1005 Riga
T : +371 29207082
info@cnc.lv
www.cnc.lv

NCT IPARI ELEKTRONIKAI KFT.
H-1148 BUDAPEST, FOGARASI ÚT 7.
TEL: +36 1 4676 300 • FAX: +36 1 4676 309
E-MAIL: NCT@NCT.HU • WWW.NCT.HU